STAINLESS STEEL GAS SPRINGS

COMPRESSION GAS SPRINGS ENDED WITH M8 THREADS

Made from 316 stainless steel, our stainless steel gas springs provide high resistance in difficult conditions (humidity, salty air, chemicals products, outside use, etc.) but have also a nice design looking and better performing than steel. They can enhance your products. Made to the same dimensions as our standard steel gas springs, but all with M8 threads, they are fully compatible with everyday applications.

This kind of spring is available with a piston diameter of 8 mm, 10 mm and 14 mm, a stroke of 60 mm to 350 mm and a force of 50N to 2100N (listed in the table below).

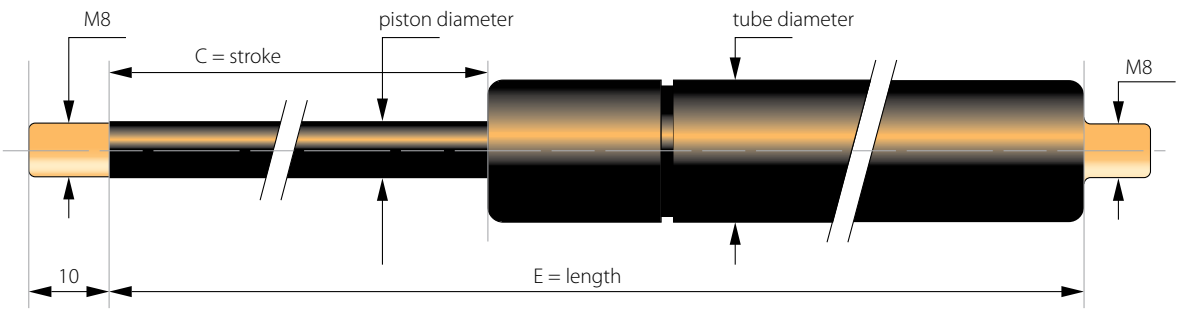

Reference	Piston diameter [mm]	Tube diameter [mm]	C - stroke [mm]	E - length [mm]	F1 - force [N]	Thread
TV D8C60Vi	8	18	60	165	50-650	M8
TV D8C80Vi	8	18	80	205	50-650	M8
TV D8C100Vi	8	18	100	245	50-650	M8
TV D8C120Vi	8	18	120	285	50-650	M8
TV D8C160Vi	8	18	160	365	50-650	M8
TV D8C180Vi	8	18	180	405	50-650	M8
TV D8C200Vi	8	18	200	445	50-650	M8
TV D8C250Vi	8	18	250	545	50-650	M8
TV D10C200Vi	10	21	200	455	100-1000	M8
TV D10C250Vi	10	21	250	555	100-1000	M8
TV D10C300Vi	10	21	300	655	100-1000	M8
TV D10C350Vi	10	21	350	755	100-900	M8
TV D10C400Vi	10	21	400	855	100-800	M8
TV D14C200Vi	14	28	200	455	200-2100	M8
TV D14C250Vi	14	28	250	555	200-2100	M8
TV D14C300Vi	14	28	300	655	200-2100	M8
TV D14C350Vi	14	28	350	755	200-2100	M8